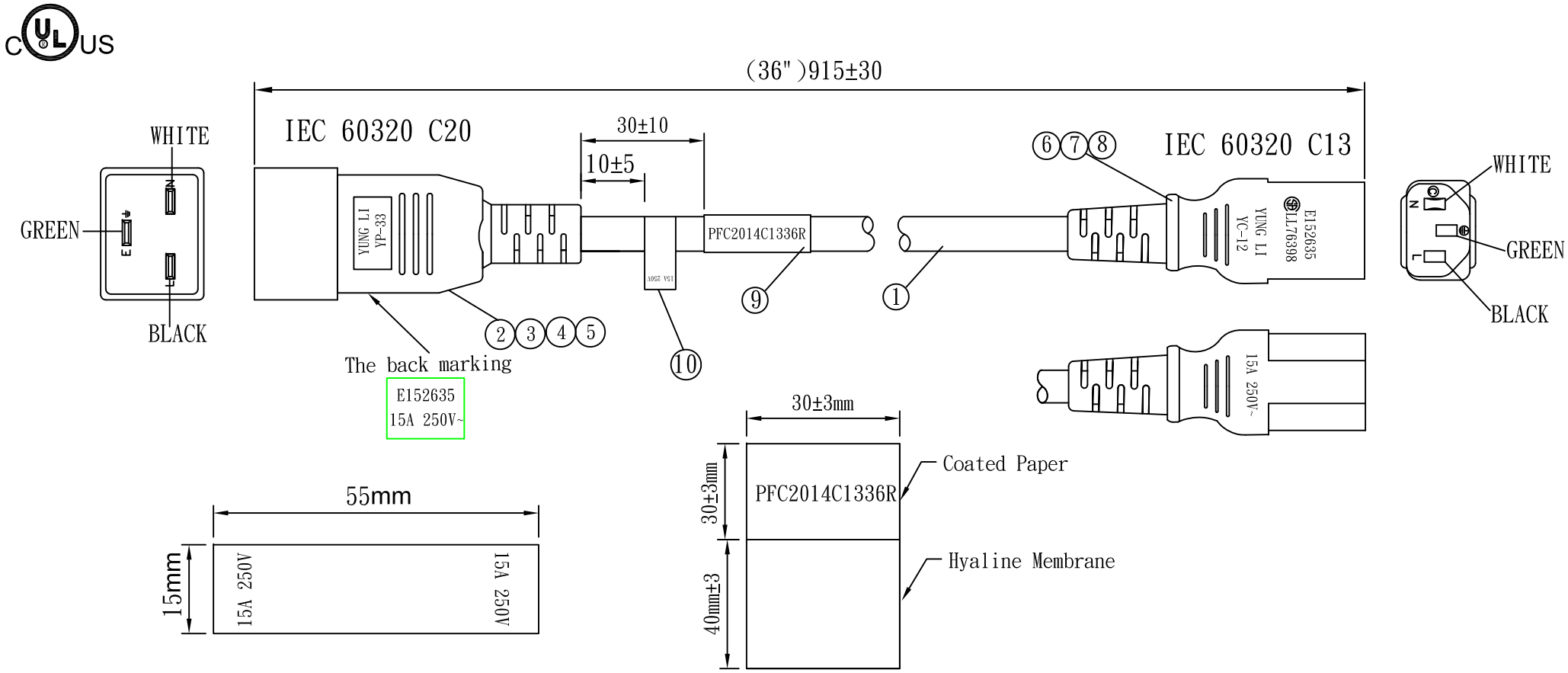

NO.	SPECIFICATION	Q'TY	REMARK
1	SJT 14/3C 105°C RED(GY-49)	1PC	
2	TER:97606BS-1	2PCS	
3	TER:97607BS-1	1PC	
4	YP-33 INNER BODY	1PC	
5	YP-33 PVC PLASTIC:35P RED(GY-49)	32g/PC	
6	TER:97740	3PCS	
7	YC-12 INNER BODY	1PC	
8	YC-12 PVC PLASTIC:35P RED(GY-49)	18g/PC	
9	LABEL:(40+30)*30mm	1PC	
10	LABEL:55*15mm	1PC	

Packing:
1. Bulk Pack.
2. Bundles of 10 Pieces.

Tolerance >0±0.30 >1.0±0.50 >10.0±1.0 >20.0±2.0 Angle: ±1°	Approved		Date		StayOnline®			
	Checked		Date					
	Drawn	SUKI	Date	12.08.06	Customer			
	Cat.No.	YP-33/YC-12			P/N.	PFC2014C1336R		
	Drawing No.	3364	Rev.	B	Material	P.V.C	Unit	mm
					Scale			